Part	L (uH)	Tol %	Q Min. (**MHz)	RDC MAX (Ω)	IDC IN (mA)
PKB0865-1R0	1.0 @25.2 MHz	M	20	0.02	8600
PKB0865-1R5	1.5 @7.96 MHz	M	20	0.02	7600
PKB0865-2R2	2.2 @7.96 MHz	M	20	0.03	6300
PKB0865-3R3	3.3 @7.96 MHz	M	20	0.03	5400
PKB0865-4R7	4.7 @7.96 MHz	M	20	0.03	4600
PKB0865-6R8	6.8 @7.96 MHz	M	20	0.04	4100
PKB0865-100	10 @2.52 MHz	K	50	0.04	3400
PKB0865-120	12 @2.52 MHz	K	50	0.05	3100
PKB0865-150	15 @2.52 MHz	K	50	0.05	2900
PKB0865-180	18 @2.52 MHz	K	50	0.06	2600
PKB0865-220	22 @2.52 MHz	K	50	0.07	2400
PKB0865-270	27 @2.52 MHz	K	50	0.07	2200
PKB0865-330	33 @2.52 MHz	K	30	0.08	2100
PKB0865-390	39 @2.52 MHz	K	30	0.09	1900
PKB0865-470	47 @2.52 MHz	K	30	0.1	1800
PKB0865-560	56 @2.52 MHz	K	30	0.14	1500
PKB0865-680	68 @2.52 MHz	K	30	0.16	1400
PKB0865-820	82 @2.52 MHz	K	30	0.17	1300
PKB0865-101	100 @0.796 MHz	K	20	0.22	1100
PKB0865-121	120 @0.796 MHz	K	20	0.25	1000
PKB0865-151	150 @0.796 MHz	K	20	0.29	920
PKB0865-181	180 @0.796 MHz	K	20	0.45	800
PKB0865-221	220 @0.796 MHz	K	20	0.51	730
PKB0865-271	270 @0.796 MHz	K	20	0.58	670
PKB0865-331	330 @0.796 MHz	K	20	0.66	620
PKB0865-391	390 @0.796 MHz	K	20	0.74	570
PKB0865-471	470 @0.796 MHz	K	20	0.83	520

SPECIFICATION

TYPE = PKB0865
CONSTRUCTION = RADIAL CHOKE WITH BASE
TERIMAL COATING = Pb FREE SOLDER
OPERATING TEMP. = -40 TO +85°C
STORAGE TEMP = -55 TO +125°C
INSULATION RESISTANCE = 100MOhm. 100V TERMINAL-CORE
DIELECTRIC STREGTH = 250Vac TERMINAL-CORE
HUMIDITY EFFECTS = L±5 @ 95%RH, 40°C, 1HR
Q±5 @ 95%RH, 40°C, 1HR
PACKAGING = 5000PCS/CARTON
MARKING = 3 CHARACTERS, VALUE

NOTE

TOLERANCES J=5%; K=10%; M=20%
OPTIONAL UL SLEEVE
** = TEST FREQUENCY AS SPECIFIED IN 'L' COLUMN

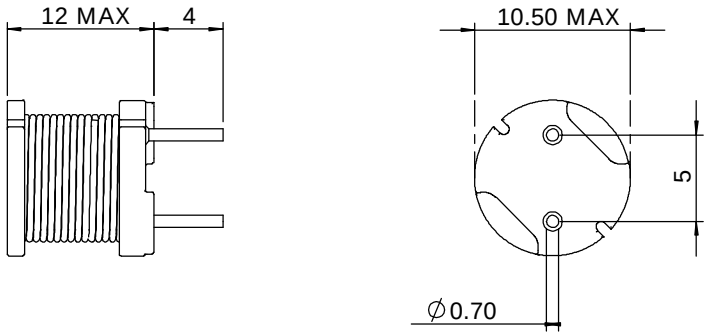

(IMPROVED MECHANICAL STABILITY)

PROPRIETARY AND CONFIDENTIAL
THE INFORMATION CONTAINED IN THIS DRAWING IS THE SOLE PROPERTY OF AIT COMPONENTS LTD. ANY REPRODUCTION IN PART OR AS A WHOLE WITHOUT THE WRITTEN PERMISSION OF AIT COMPONENTS LTD IS STRICTLY PROHIBITED.

MATERIAL --
FINISH --

	NAME	DATE
DRAWN		
CHECKED	WEB-SITE DATA SHEET	
ENG APPR.		

UNLESS OTHERWISE SPECIFIED DIMENSIONS ARE IN MILLIMETERS
TOLERANCES:
ONE PLACE DECIMAL +/-0.3
TWO PLACE DECIMAL +/-0.13
ANGLE +/-1 DEGREE

DO NOT SCALE DRAWING

AIT COMPONENTS LTD.
WWW.AITCOMPONENTS.COM

TITLE:
PKB0865 FIXED RADIAL INDUCTOR WITH BASE

SIZE **A** | DWG. NO. PKB0865_AIC_WEB_220506 | REV. **00**
SCALE:1:1 | REV '0' = PRELIMINARY DATA | SHEET 1 OF 1