Part	L	Tol	R_{DC}	I_{DC}
	(μH)	%	MAX	I_N
			(Ω)	(A)
CDRH73-100	10 @ 2.52 MHz	L,M	0.07	1.68
CDRH73-120	12 @ 2.52 MHz	L,M	0.1	1.52
CDRH73-150	15 @ 2.52 MHz	L,M	0.13	1.33
CDRH73-180	18 @ 2.52 MHz	L,M	0.14	1.2
CDRH73-220	22 @ 2.52 MHz	L,M	0.19	1.07
CDRH73-270	27 @ 2.52 MHz	L,M	0.21	0.96
CDRH73-330	33 @ 2.52 MHz	L,M	0.24	0.91
CDRH73-390	39 @ 2.52 MHz	L,M	0.32	0.77
CDRH73-470	47 @ 2.52 MHz	L,M	0.36	0.76
CDRH73-560	56 @ 2.52 MHz	L,M	0.47	0.68
CDRH73-680	68 @ 2.52 MHz	L,M	0.52	0.61
CDRH73-820	82 @ 2.52 MHz	L,M	0.69	0.57
CDRH73-101	100 @ 1.0 kHz	L,M	0.79	0.5
CDRH73-121	120 @ 1.0 kHz	L,M	0.89	0.49
CDRH73-151	150 @ 1.0 kHz	L,M	1.27	0.43
CDRH73-181	180 @ 1.0 kHz	L,M	1.45	0.39
CDRH73-221	220 @ 1.0 kHz	L,M	1.65	0.35
CDRH73-271	270 @ 1.0 kHz	L,M	2.31	0.32
CDRH73-331	330 @ 1.0 kHz	L,M	2.62	0.28
CDRH73-391	390 @ 1.0 kHz	L,M	2.94	0.26
CDRH73-471	470 @ 1.0 kHz	L,M	4.18	0.24
CDRH73-561	560 @ 1.0 kHz	L,M	4.67	0.22
CDRH73-681	680 @ 1.0 kHz	L,M	5.73	0.19
CDRH73-821	820 @ 1.0 kHz	L,M	6.54	0.18
CDRH73-102	1000 @ 1.0 kHz	L,M	9.44	0.16

SPECIFICATION

TYPE = CDRH73
CONSTRUCTION = SURFACE MOUNT POWER INDUCTOR
TERIMAL COATING = NICKEL / SILVER
OPERATING TEMP. = -40 TO +85˚C
STORAGE TEMP = -55 TO +125˚C
INSULATION RESISTANCE = 100MOhm. 100V TERMINAL-CORE
DIELECTRIC STREGTH = 250Vac TERMINAL-CORE
HUMIDITY EFFECTS = L±5 @ 95%RH, 40˚C, 1HR
Q±5 @ 95%RH, 40˚C, 1HR
PACKAGING = 1000PCS/REEL
MARKING = 3 CHARACTERS, VALUE

NOTE

TOLERANCES L=15%; M=20%; N=30%

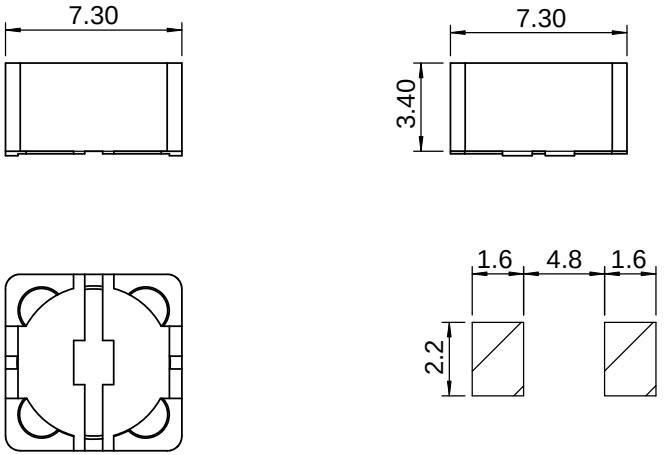

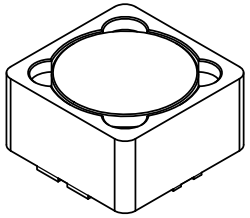

PROPRIETARY AND CONFIDENTIAL
THE INFORMATION CONTAINED IN THIS DRAWING IS THE SOLE PROPERTY OF AIT COMPONENTS LTD. ANY REPRODUCTION IN PART OR AS A WHOLE WITHOUT THE WRITTEN PERMISSION OF AIT COMPONENTS LTD IS STRICTLY PROHIBITED.

	NAME	DATE
DRAWN		
CHECKED		
ENG APPR.		

UNLESS OTHERWISE SPECIFIED
DIMENSIONS ARE IN MILLIMETERS
TOLERANCES:
ONE PLACE DECIMAL +/-0.3
TWO PLACE DECIMAL +/-0.13
ANGLE +/-1 DEGREE

MATERIAL --
FINISH --

DO NOT SCALE DRAWING

AIT COMPONENTS LTD
www.aitcomponents.com

TITLE:
CDRH73 SMD
POWER INDUCTOR

SIZE A | DWG. NO. CDRH73 SMD POWER INDUCTOR | REV. 00
SCALE:1:1 | SHEET 1 OF 1