Part	L	Tol	R_{DC}	I_{DC}
	(μH)	%	MAX	I_N
			(Ω)	(A)
CDRH125-2R1	2.1 @ 100 kHz	M	0.02	7
CDRH125-3R1	3.1 @ 100 kHz	M	0.02	6
CDRH125-4R4	4.4 @ 100 kHz	M	0.02	5
CDRH125-5R8	5.8 @ 100 kHz	M	0.02	4.4
CDRH125-7R5	7.5 @ 100 kHz	M	0.02	4.2
CDRH125-100	10 @ 1.0 kHz	M	0.03	4
CDRH125-150	15 @ 1.0 kHz	M	0.03	3.3
CDRH125-180	18 @ 1.0 kHz	M	0.04	3
CDRH125-220	22 @ 1.0 kHz	M	0.04	2.8
CDRH125-330	33 @ 1.0 kHz	L,M	0.06	2.1
CDRH125-390	39 @ 1.0 kHz	L,M	0.07	2
CDRH125-470	47 @ 1.0 kHz	L,M	0.08	1.8
CDRH125-560	56 @ 1.0 kHz	L,M	0.11	1.7
CDRH125-680	68 @ 1.0 kHz	L,M	0.12	1.5
CDRH125-820	82 @ 1.0 kHz	L,M	0.14	1.4
CDRH125-101	100 @ 1.0 kHz	L,M	0.16	1.3
CDRH125-121	120 @ 1.0 kHz	L,M	0.17	1.1
CDRH125-151	150 @ 1.0 kHz	L,M	0.23	1
CDRH125-181	180 @ 1.0 kHz	L,M	0.29	0.9
CDRH125-221	220 @ 1.0 kHz	L,M	0.4	0.8
CDRH125-271	270 @ 1.0 kHz	L,M	0.46	0.75
CDRH125-331	330 @ 1.0 kHz	L,M	0.51	0.68
CDRH125-471	470 @ 1.0 kHz	L,M	0.77	0.58
CDRH125-561	560 @ 1.0 kHz	L,M	0.86	0.54
CDRH125-681	680 @ 1.0 kHz	L,M	1.2	0.48
CDRH125-821	820 @ 1.0 kHz	L,M	1.34	0.43
CDRH125-102	102 @ 1.0 kHz	L,M	1.53	0.4

SPECIFICATION

TYPE = CDRH125
CONSTRUCTION = SURFACE MOUNT POWER INDUCTOR
TERIMAL COATING = NICKEL / SILVER
OPERATING TEMP. = -40 TO +85˚C
STORAGE TEMP = -55 TO +125˚C
INSULATION RESISTANCE = 100MOhm. 100V TERMINAL-CORE
DIELECTRIC STREGTH = 250Vac TERMINAL-CORE
HUMIDITY EFFECTS = L±5 @ 95%RH, 40˚C, 1HR
Q±5 @ 95%RH, 40˚C, 1HR
PACKAGING = 500PCS/REEL
MARKING = 3 CHARACTERS, VALUE

NOTE

TOLERANCES L=15%; M=20%; N=30%

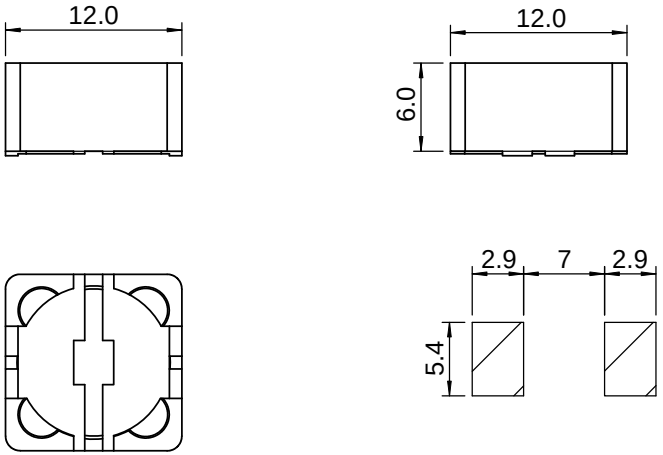

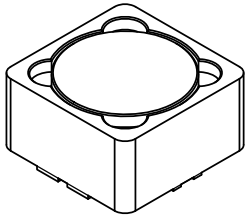

PROPRIETARY AND CONFIDENTIAL
THE INFORMATION CONTAINED IN THIS DRAWING IS THE SOLE PROPERTY OF AIT COMPONENTS LTD. ANY REPRODUCTION IN PART OR AS A WHOLE WITHOUT THE WRITTEN PERMISSION OF AIT COMPONENTS LTD IS STRICTLY PROHIBITED.

	NAME	DATE
DRAWN		
CHECKED		
ENG APPR.		

UNLESS OTHERWISE SPECIFIED
DIMENSIONS ARE IN MILLIMETERS
TOLERANCES:
ONE PLACE DECIMAL +/-0.3
TWO PLACE DECIMAL +/-0.13
ANGLE +/-1 DEGREE

MATERIAL --
FINISH --
DO NOT SCALE DRAWING

AIT COMPONENTS LTD
www.aitcomponents.com

TITLE:
CDRH125 SMD
POWER INDUCTOR

SIZE A | DWG. NO. CDRH125 SMD POWER INDUCTOR | REV. 00
SCALE:1:1 | SHEET 1 OF 1