Part	L	Tol	R_{DC}	I_{DC}
	(μH)	%	MAX	I_N
			(Ω)	(A)
CDRH124-3R9	3.9 @ 100 kHz	M	0.015	6.5
CDRH124-4R7	4.7 @ 100 kHz	M	0.018	5.7
CDRH124-6R9	6.9 @ 100 kHz	M	0.023	4.9
CDRH124-100	10 @ 100 kHz	M	0.028	4.5
CDRH124-120	12 @ 100 kHz	M	0.038	4
CDRH124-150	15 @ 100 kHz	M	0.05	3.2
CDRH124-180	18 @ 100 kHz	M	0.057	3.1
CDRH124-220	22 @ 100 kHz	M	0.066	2.9
CDRH124-270	27 @ 100 kHz	M	0.08	2.8
CDRH124-330	33 @ 100 kHz	M	0.097	2.7
CDRH124-390	39 @ 100 kHz	M	0.132	2.1
CDRH124-470	47 @ 100 kHz	M	0.15	1.9
CDRH124-560	56 @ 100 kHz	M	0.19	1.8
CDRH124-680	68 @ 100 kHz	M	0.22	1.5
CDRH124-820	82 @ 100 kHz	M	0.26	1.3
CDRH124-101	100 @ 100 kHz	M	0.308	1.2
CDRH124-121	120 @ 100 kHz	M	0.38	1.1
CDRH124-151	150 @ 100 kHz	M	0.53	0.95
CDRH124-181	180 @ 100 kHz	M	0.62	0.85
CDRH124-221	220 @ 100 kHz	M	0.7	0.8
CDRH124-271	270 @ 100 kHz	M	0.876	0.6
CDRH124-331	330 @ 100 kHz	M	0.99	0.5

SPECIFICATION

TYPE = CDRH124
CONSTRUCTION = SURFACE MOUNT POWER INDUCTOR
TERIMAL COATING = NICKEL / SILVER
OPERATING TEMP. = -40 TO +85˚C
STORAGE TEMP = -55 TO +125˚C
INSULATION RESISTANCE = 100MOhm. 100V TERMINAL-CORE
DIELECTRIC STREGTH = 250Vac TERMINAL-CORE
HUMIDITY EFFECTS = L±5 @ 95%RH, 40˚C, 1HR
Q±5 @ 95%RH, 40˚C, 1HR
PACKAGING = 500PCS/REEL
MARKING = 3 CHARACTERS, VALUE

NOTE

TOLERANCES L=15%; M=20%; N=30%

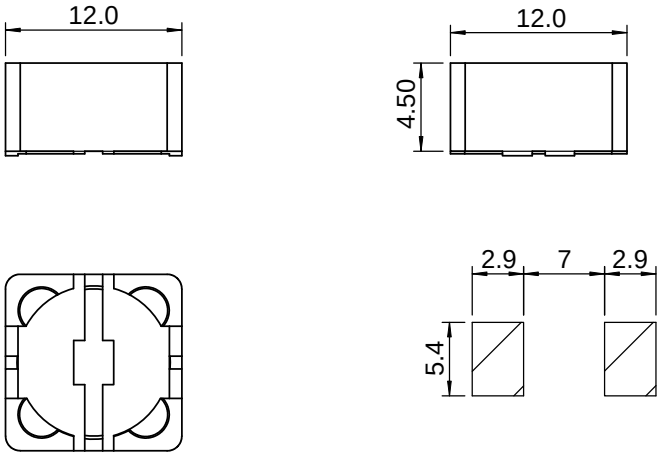

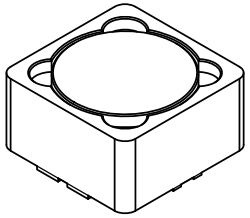

PROPRIETARY AND CONFIDENTIAL
THE INFORMATION CONTAINED IN THIS DRAWING IS THE SOLE PROPERTY OF AIT COMPONENTS LTD. ANY REPRODUCTION IN PART OR AS A WHOLE WITHOUT THE WRITTEN PERMISSION OF AIT COMPONENTS LTD IS STRICTLY PROHIBITED.

	NAME	DATE
DRAWN		
CHECKED		
ENG APPR.		

UNLESS OTHERWISE SPECIFIED
DIMENSIONS ARE IN MILLIMETERS
TOLERANCES:
ONE PLACE DECIMAL +/-0.3
TWO PLACE DECIMAL +/-0.13
ANGLE +/-1 DEGREE

MATERIAL --
FINISH --
DO NOT SCALE DRAWING

AIT COMPONENTS LTD
www.aitcomponents.com

TITLE:
CDRH124 SMD
POWER INDUCTOR

SIZE A | DWG. NO. CDRH124 SMD POWER INDUCTOR | REV. 00
SCALE:1:1 | SHEET 1 OF 1