Part	L	Tol	R_{DC}	I_{DC}
	(μH)	%	MAX	I_N
			(Ω)	(A)
CD73-100	10 @2.52 MHz	M	0.08	1.4
CD73-120	12 @2.52 MHz	M	0.09	1.4
CD73-150	15 @2.52 MHz	M	0.1	1.2
CD73-180	18 @2.52 MHz	M	0.11	1.1
CD73-220	22 @2.52 MHz	M	0.13	1.1
CD73-270	27 @2.52 MHz	M	0.15	0.9
CD73-330	33 @2.52 MHz	M	0.17	0.9
CD73-390	39 @2.52 MHz	M	0.22	0.7
CD73-470	47 @2.52 MHz	M	0.25	0.7
CD73-560	56 @2.52 MHz	K	0.28	0.6
CD73-680	68 @2.52 MHz	K	0.33	0.6
CD73-820	82 @2.52 MHz	K	0.41	0.5
CD73-101	100 @1.0 kHz	K	0.48	0.5
CD73-121	120 @1.0 kHz	K	0.54	0.5
CD73-151	150 @1.0 kHz	K	0.76	0.4
CD73-181	180 @1.0 kHz	K	1.02	0.4
CD73-221	220 @1.0 kHz	K	1.2	0.3
CD73-271	270 @1.0 kHz	K	1.3	0.3
CD73-331	330 @1.0 kHz	K	1.5	0.3

SPECIFICATION

TYPE = CD73
CONSTRUCTION = SURFACE MOUNT POWER INDUCTOR
TERIMAL COATING = NICKEL
OPERATING TEMP. = -40 TO +85˚C
STORAGE TEMP = -55 TO +125˚C
INSULATION RESISTANCE = 100MOhm. 100V TERMINAL-CORE
DIELECTRIC STREGTH = 250Vac TERMINAL-CORE
HUMIDITY EFFECTS = L±5 @ 95%RH, 40˚C, 1HR
Q±5 @ 95%RH, 40˚C, 1HR
PACKAGING = 1000PCS/REEL
MARKING = 3 CHARACTERS, VALUE

NOTE

TOLERANCES K=10%; M=20%.

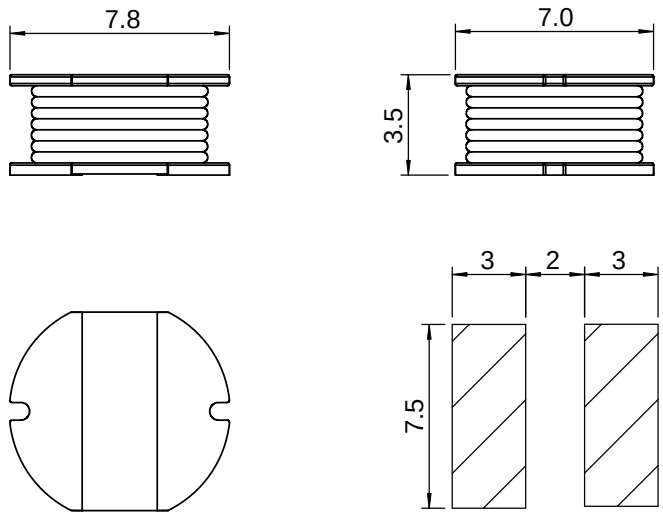

PROPRIETARY AND CONFIDENTIAL
THE INFORMATION CONTAINED IN THIS DRAWING IS THE SOLE PROPERTY OF AIT COMPONENTS LTD. ANY REPRODUCTION IN PART OR AS A WHOLE WITHOUT THE WRITTEN PERMISSION OF AIT COMPONENTS LTD IS STRICTLY PROHIBITED.

	NAME	DATE
DRAWN		
CHECKED		
ENG APPR.		

UNLESS OTHERWISE SPECIFIED
DIMENSIONS ARE IN MILLIMETERS
TOLERANCES:
ONE PLACE DECIMAL +/-0.3
TWO PLACE DECIMAL +/-0.13
ANGLE +/-1 DEGREE

MATERIAL --
FINISH --

DO NOT SCALE DRAWING

AIT COMPONENTS LTS
www.aitcomponents.com

TITLE:
CD73 SMD POWER INDUCTOR

SIZE A | DWG. NO. CD73 SMD POWER INDUCTOR | REV. 00
SCALE:1:1 | SHEET 1 OF 1